LARVIK QUADRANT STEAM

Size 900x900x2180mm

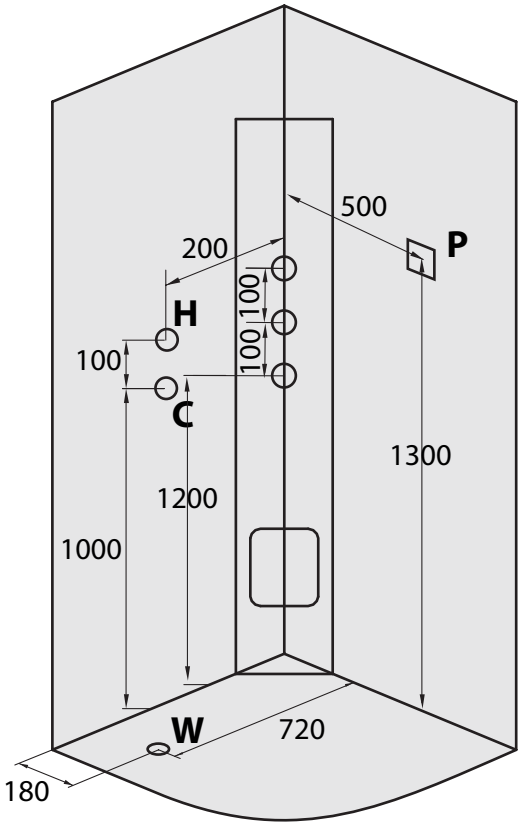

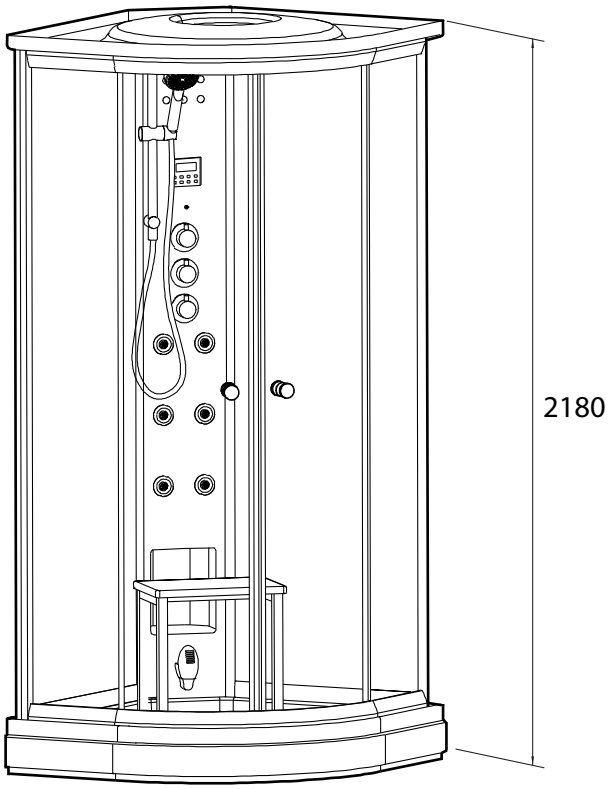

Key

P = Power
H = Hot water feed
C = Cold water feed
W = Waste trap
All measurements are in mm.

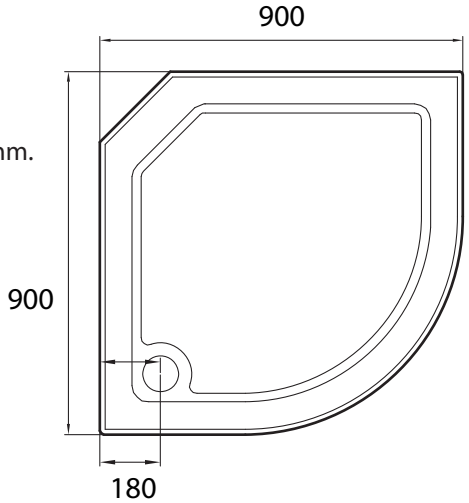

Basics

These showers are sectional and will be delivered in six boxes for assembly on site. All the sectional pieces will fit through standard doorways and up stairways. Larvik showers are freestanding and silicone free and will simply require assembly and connection to the following services; *Hot and Cold Water, Electricity, Drainage.*

Assembly

You will require access all around and above the shower in order to assemble it, once assembled it can be connected via the flexible pipes provided and moved back into its final position. The rear panels of the shower will obscure your walls behind so it's not necessary to tile behind the shower although it should be sited on a firm level surface.

Water Supply

The shower will require a supply of hot and cold water at a minimum of 1.5 bar of pressure (recommended minimum flow rate of nine litres per minute for each). This can be achieved from a combination boiler/pressurised system or a pumped gravity/vented supply.
Two 100cm long metal braided flexible hot and cold supply pipes are provided with the shower and are connected to the tap fitting behind the main rear column (see plan above for suggested connection points).

Drainage

This shower has an easy plumb raised tray built over a stainless steel box framework with adjustable feet. There is a fall of approximately 10cm from the top of the tray to ground level. The tray has a removable front skirt panel and is fitted with a 90mm shallow waste trap and comes complete with a flexible and extendable waste pipe. The removable skirt and front access under the tray does allow for connection to a fixed waste if preferred.

Ventilation

No additional ventilation is required beyond what is necessary for a conventional shower. The roof will contain the water vapour and the steam can be condensed to waste by turning on the shower after use.

Electrical Connection

A 3kw electrical supply is required which should be connected though the RCD (residual current device) supplied or an appropriate RCD protected consumer board. We also recommend that an isolation switch is installed to cut the power to the transformer that powers the voltage ancillaries (radio lights etc.). It's essential that all electrical work is carried out by a fully qualified electrician or inspected before use.

© 2013 **EdenSteamShowers.co.uk**