LARVIK OFF SET QUADRANT (right)

Size 1200x900x2060mm*

(*Standard model dimensions and image shown, monsoon models are 2250mm high)

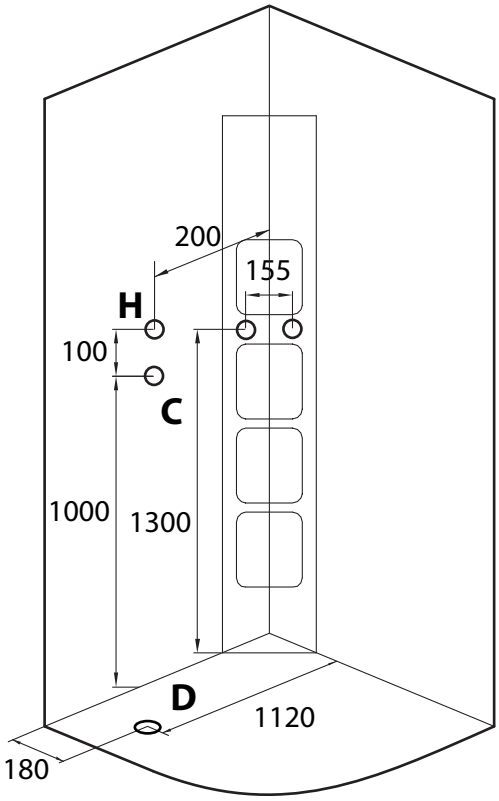

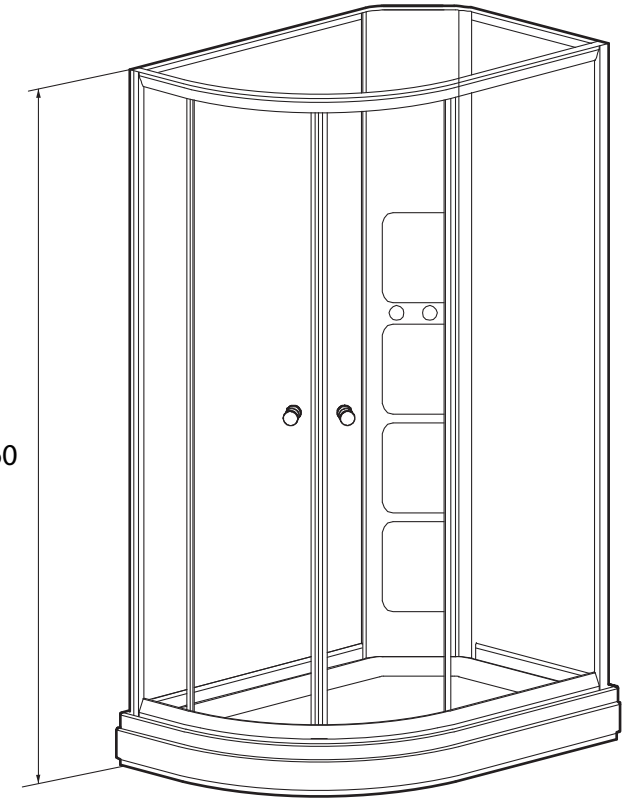

Key

H = Hot water feed
C = Cold water feed
D = Drainage
All measurements are in mm.

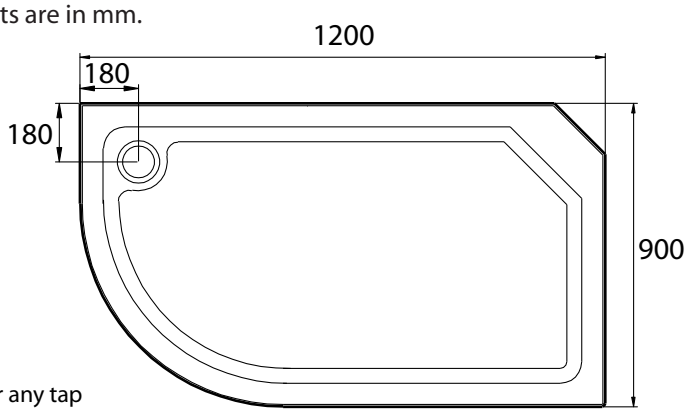

Available options

Standard model: Supplied with a standard size thermostatic bar mixer tap and comes complete with a multifunction shower set and adjustable rail.

Monsoon model: Centre column fitted with a thermostatic mixer, six body jets, hand rail shower and an overhead monsoon shower.

Plain column model: Can be fitted with a power shower, electric shower or any tap fitting that can be accommodated on the centre column.

Delivery

These showers are sectional and will be delivered in four boxes for assembly on site. All the sectional pieces will fit through standard doorways and up stairways.

Basics

These showers are free standing and silicone free units that simply require assembly and connection to the following services;

Hot and cold water (Minimum of 0.5 bar required for standard bar mixer tap model and 1.5 bar for the monsoon shower model with body jets).

Drainage.

Assembly

You will require access all around the unit in order to assemble it. Once assembled the unit can be simply connected via the flexible pipes provided and pushed back into position. The rear walls are completely obscured and it is not necessary to tile behind the shower although it should be sited on a firm level surface.

Connection / Water *

Hot and cold water connection on the standard and monsoon shower model is via two 100cm metal braided flexible 15mm pipes with female connectors (supplied). These pipes connect to the tap fitting in the column at the rear corner of the shower. These showers will work with a combination boiler or any system that can provide adequate hot and cold water pressure.

*The water connection position, fittings and water supply requirement for the plain column model will depend entirely on what type of shower unit is fitted to the column.

Connection / Waste

The shower has an easy plumb raised tray built over a stainless steel box frame with adjustable feet. There is a fall of approximately 10cm from drain in the tray to ground level . The tray has a removable front skirt and is fitted with a 90mm fast flow shallow trap and comes complete with an extendable flexible waste pipe with a 40mm end.

© 2013 **EdenSteamShowers.co.uk**